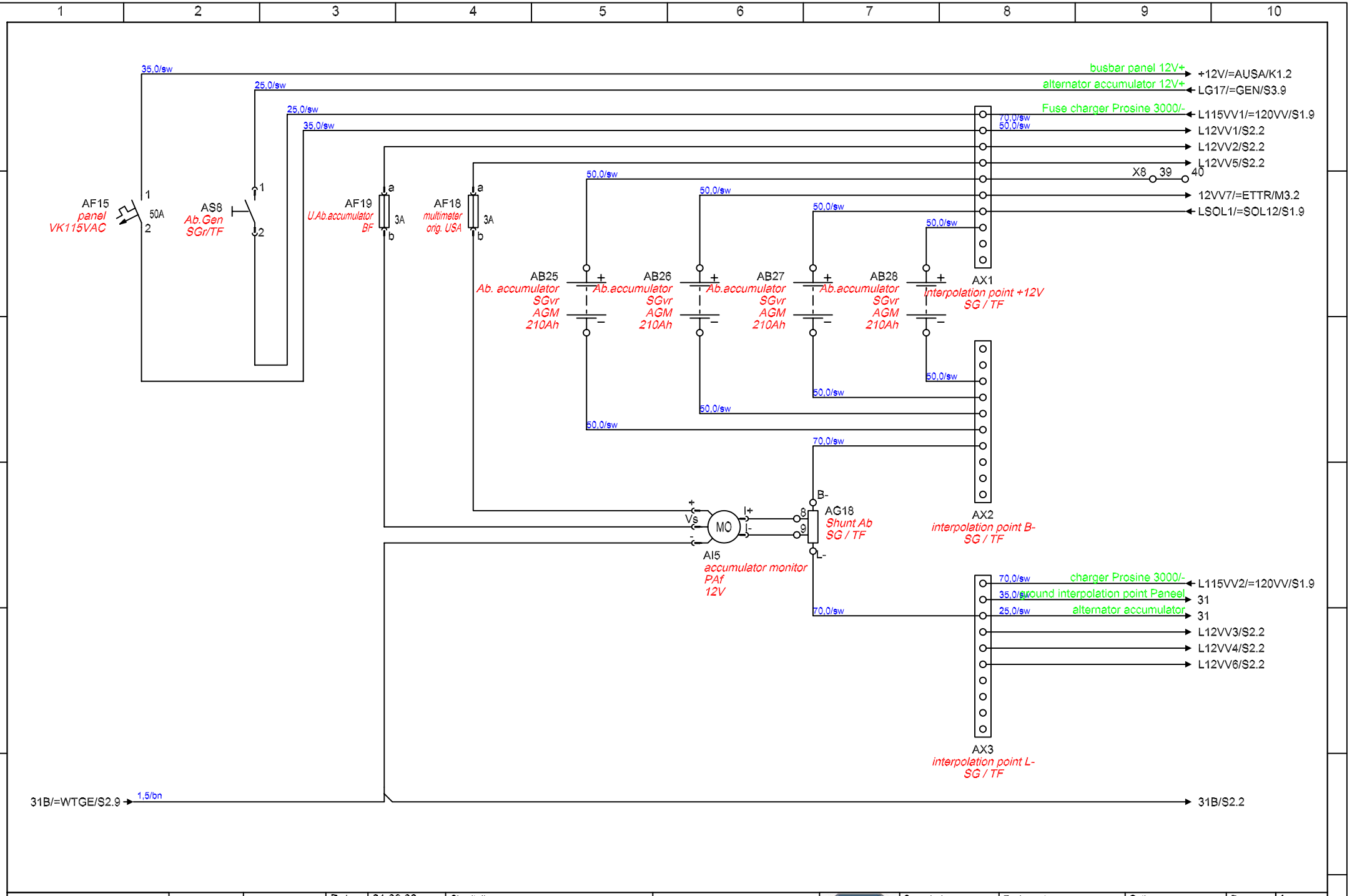

			Date	31.08.06	Circuit diagram 12V feed-in basic equipment	UNICAT Fahrzeugbau GmbH Gewerbering 9-21 D-76706 Dettenheim	UNICAT	Commission am1	Equipment 12VV	Option BASIS	Page S1 / from 2
			Editor	udw				Printdate 08.09.06	Circuit diagram number 1345		
Change	Date	Name	Exam.								

UNICAT Fahrzeugbau GmbH - Phone: +49 7255 - 7606 0
All rights reserved
Right to reproduction and data to be circulated only with written agreement / authorisation

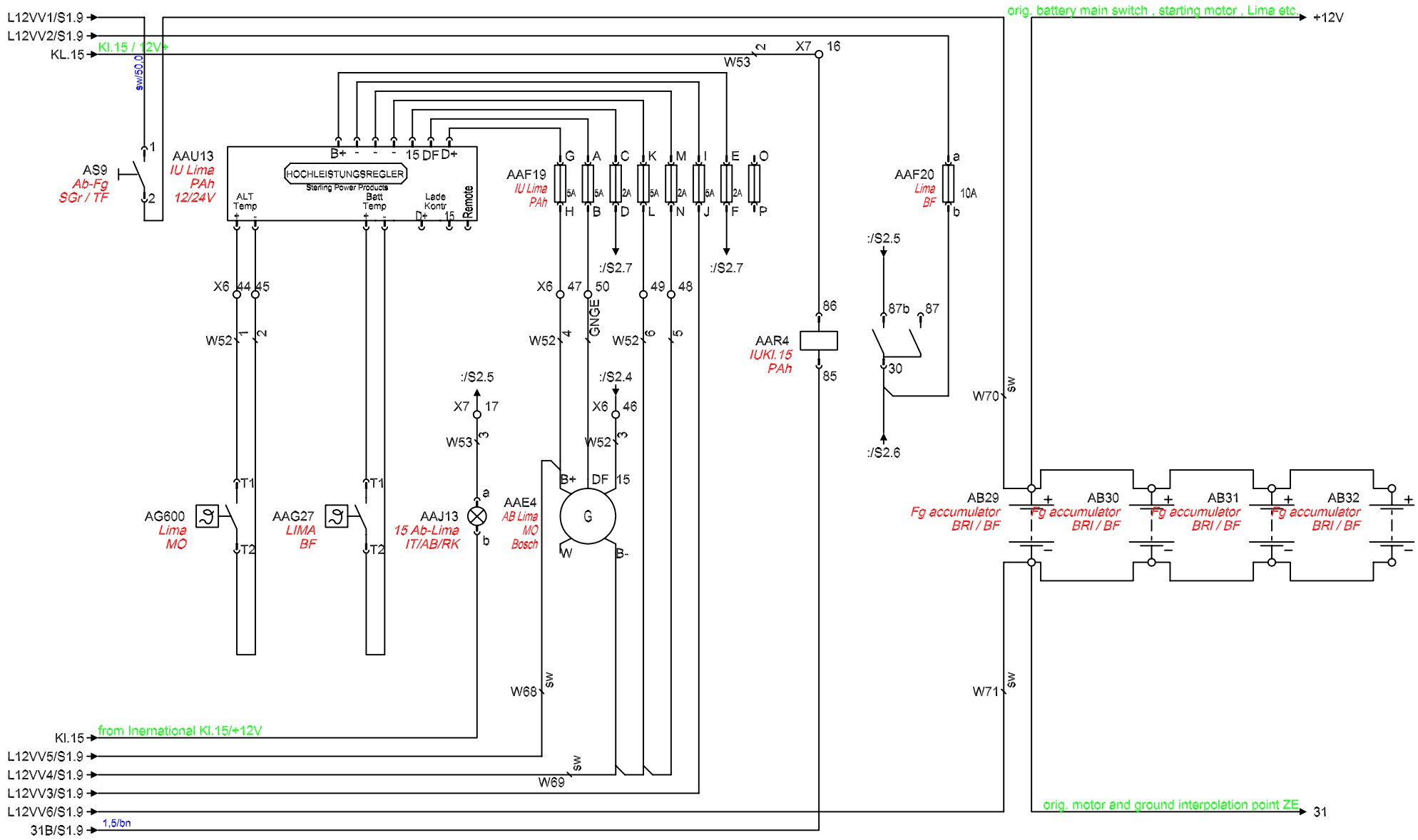

			Date	31.08.06	Circuit diagram	UNICAT Fahrzeugbau GmbH	UNICAT	Commission	Equipment	Option	Page / from
			Editor	udw	12V feed-in	Gewerbering 9-21		am1	12VV	BASIS	S2 / 2
			Exam.		basic equipment	D-76706 Dettenheim		Printdate	Circuit diagram number		
Change	Date	Name						08.09.06	1345		

UNICAT Fahrzeugbau GmbH - Phone: +49 7255 - 7606 0
All rights reserved
Right to reproduction and data to be circulated only with written agreement / authorisation